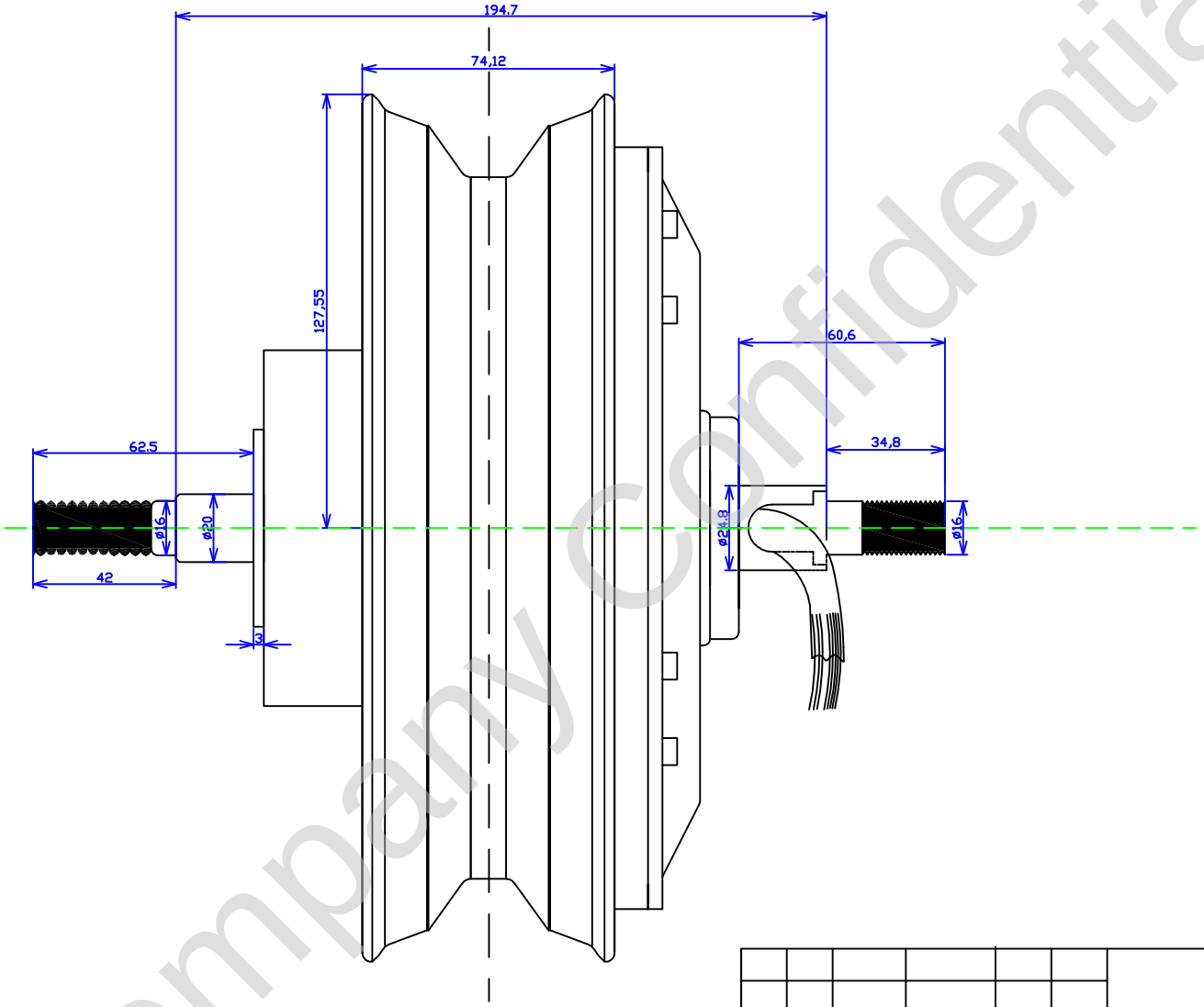

								KELLY CONTROLS, LLC
Mark		Subarea	Signatory		Date	12.06.2011		48V 800W 10" Hub motor dimension
Design			Stand			modification	Number	Proportion
Assessor								
Technics			Authorize					
						Sum		

Company Confidential