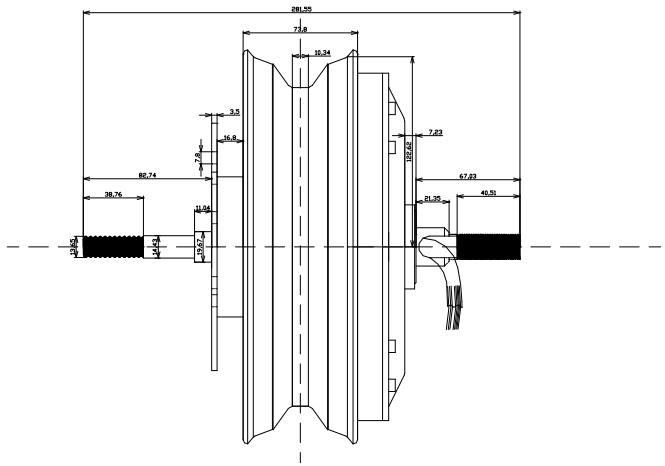

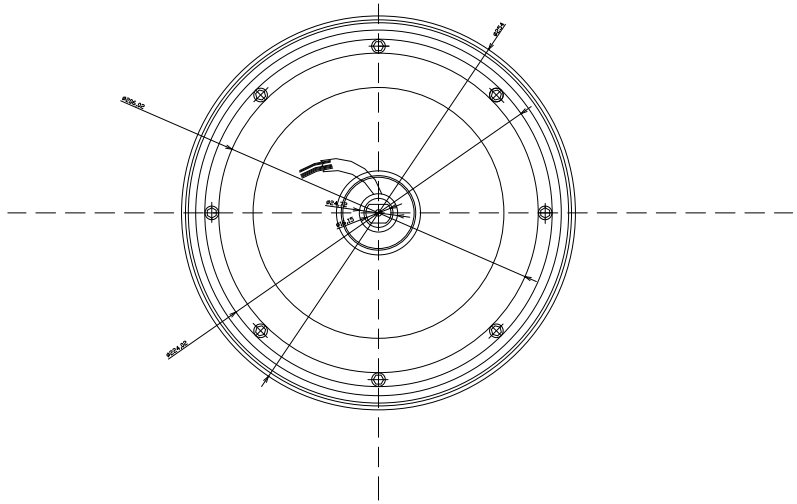

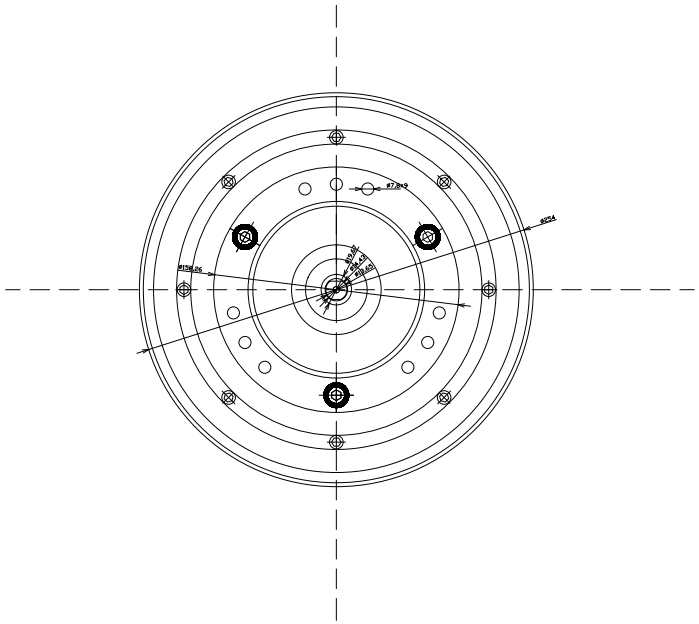

								KELLY CONTROLS, LLC
Mark		Subarea	Signatory		Date	05.21.2009		72V 6KW 10" Hub motor dimension
Design			Stand			modification	Number	Proportion
Assessor								
Technics			Authorize					
						Sum		