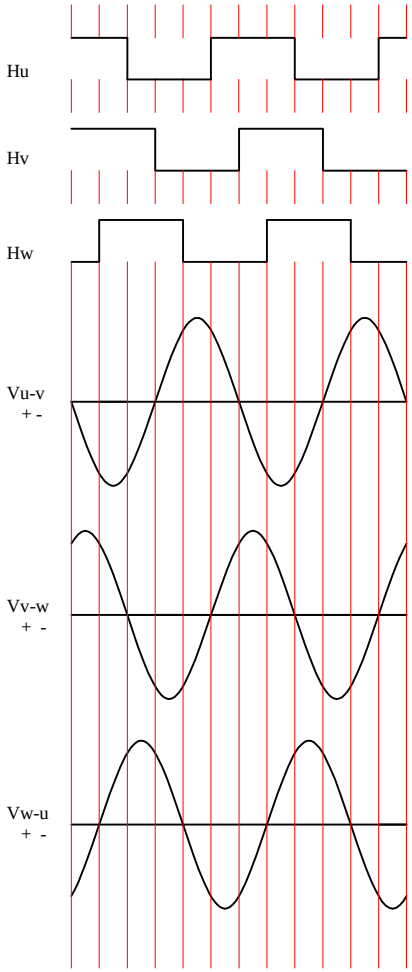

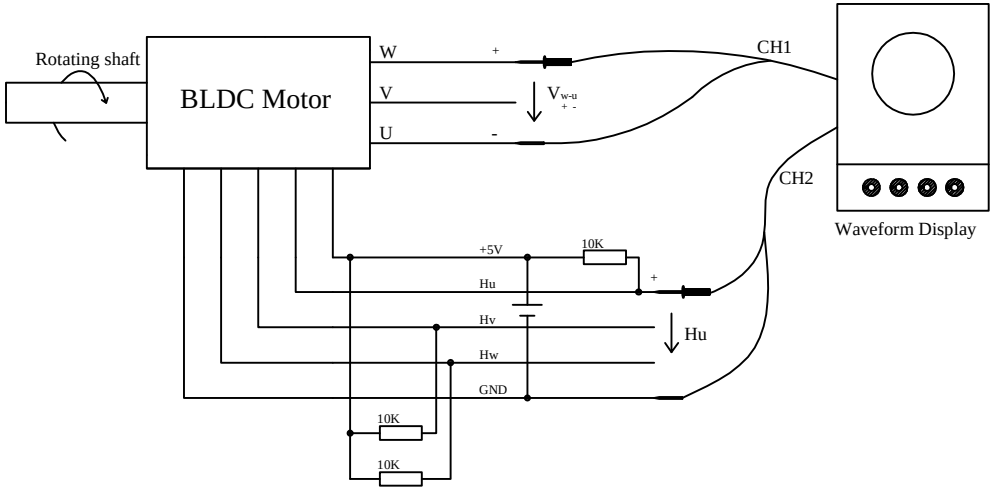

Adjust correct position of hall sensors via back EMF before connecting motor to driver!

									KELLY CONTROLS, LLC
Mark		Subarea	Signatory		Date	05/22/2010			Hall/Phase timing(60°)
Design	Steven		Stand	Fany		modification	Number	Proportion	
Assessor	Daniel								V1.0
Technics			Authorize	Steven					
						Sum			