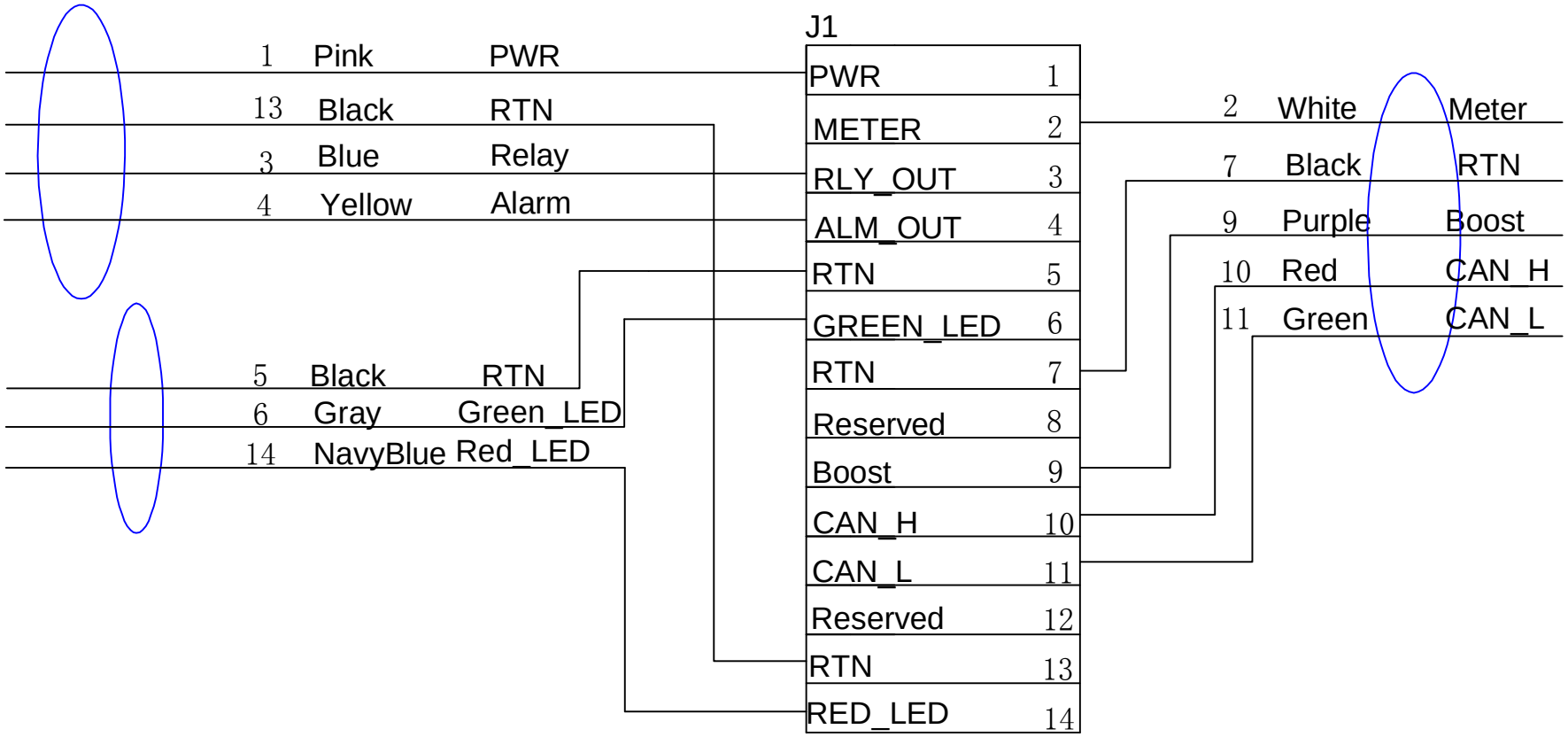

J1 Cable

								KELLY CONTROLS, LLC
Mark		Subarea	Signatory		Date			J1 Cable of HP/KBLI wiring diagram
Design			Stand			modification	Number	Proportion
Assessor								
Technics			Authorize					
						Sum		