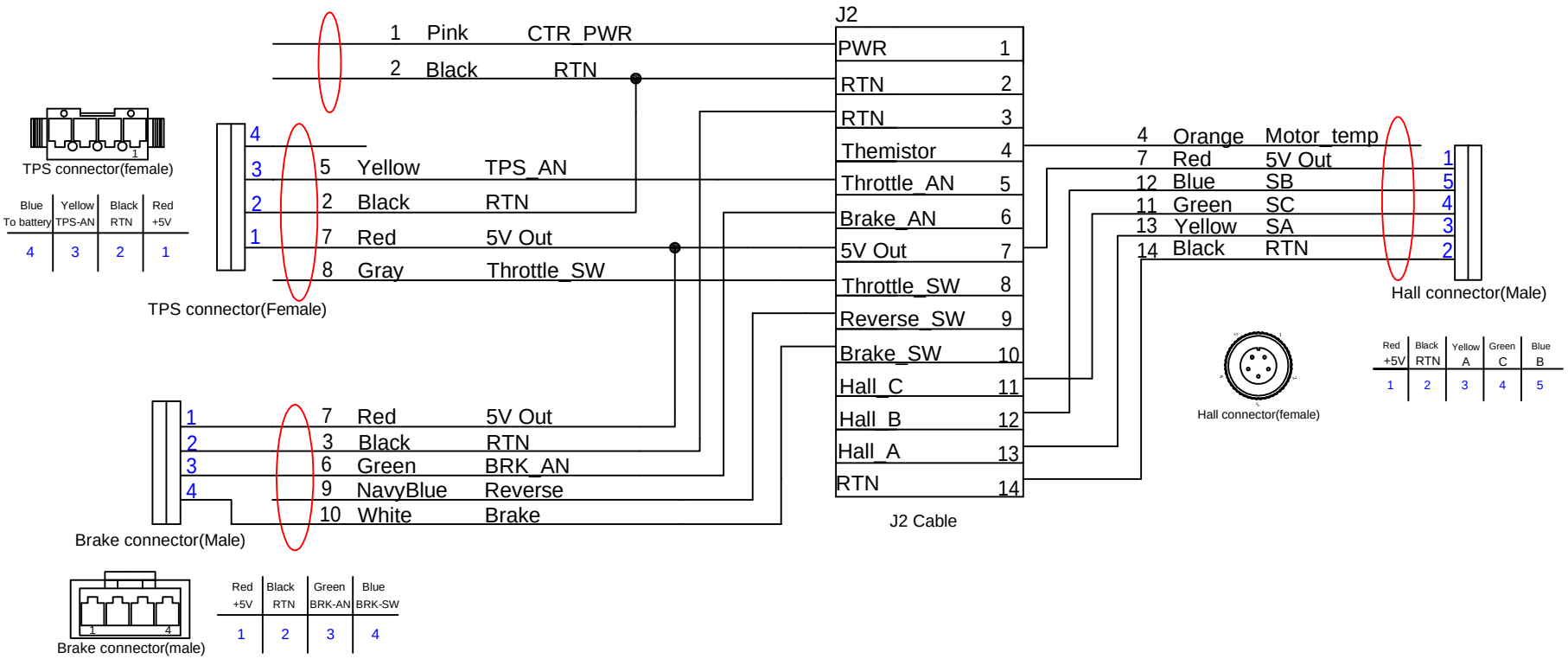

Phase
Kelly Controller-------Crystalyte Motor

A----------A(Blue)
B----------B(Green)
C----------C(Yellow)

								KELLY CONTROLS, LLC
Mark		Subarea	Signatory		Date	08/02/2009		J2 Cable for Xlyte motor
Design			Stand			modification	Number	Proportion
Assessor								
Technics			Authorize					
						Sum		